BERMAQ®
ACRYLIC POLISHING & CNC MACHINES

AMi-C

First fully automated diamond polishing machine

The AMI-C model integrates advanced innovations for polishing acrylic, plastics, and non-ferrous materials.

Its standard equipment is designed to simplify the workflow, speed up production, and deliver exceptional finish quality.

Additionally, a range of optional features allows the AMI-C to be customized to each client's needs, offering the perfect balance between performance and cost.



Tool sharpening service in 24 hours

ONLY USE 100% ORIGINAL BERMAQ TOOLS

*Transparent finish tool set **INCLUDED** free of charge.

Automatic tilting head up to 60º

PMMA	PRINTED PMMA	PMMA COLOR	PET-G	POM	ACM	PC
PMMA + ALU	PMMA INLAYS	SAN	PVC	PE/PS	ALU	PLASTIC
PMMA + PAPER	RESIN	SOL SURF	PMMA XT	PMMA GT	COMP	PP

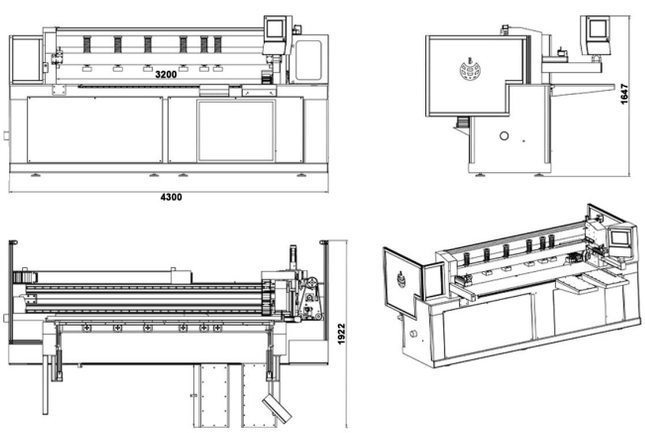

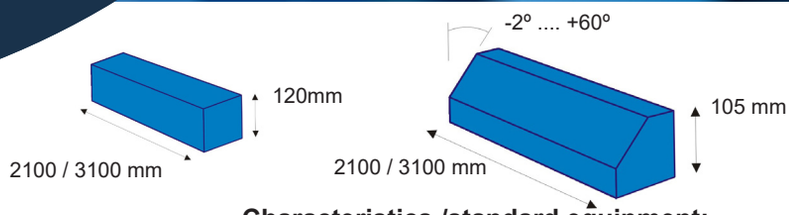

Characteristics /standard equipment:

Working length: 2100 mm × 3.100 mm
Maximum material thickness:
- -With milling motor at 60°: 108 mm
- -With milling motor at 45°: 87 mm
- -With milling motor at 30°: 60 mm

Maximum depth: 4 mm
Spindle motor speed: 5,000 – 10,000 rpm
Milling feed speed: 0 – 10 m/min
Load/feed speed: 0 – 20 m/min
Air pressure: 6 bar
Suction diameter: 80 mm
Standard number of clamps: 5 / 7 units
Weight: 1.950 / 2.150 kg
Bevel range: -2° – 60°
Installed power: 8.5 kW
Piece length programming (OFFSET)
Safety regulations: CE
Touch screen: LCD 10.4"
Communication interface: CANOpen
Steel table for grinding
Milling spindle adjustable depth
Precision depth electronically adjustable: ±0.05 mm
Tool cabinet
Structural steel frame, stress-relieved
Support table

*** Tool set included**

BERMAQ®
ACRYLIC POLISHING & CNC MACHINES

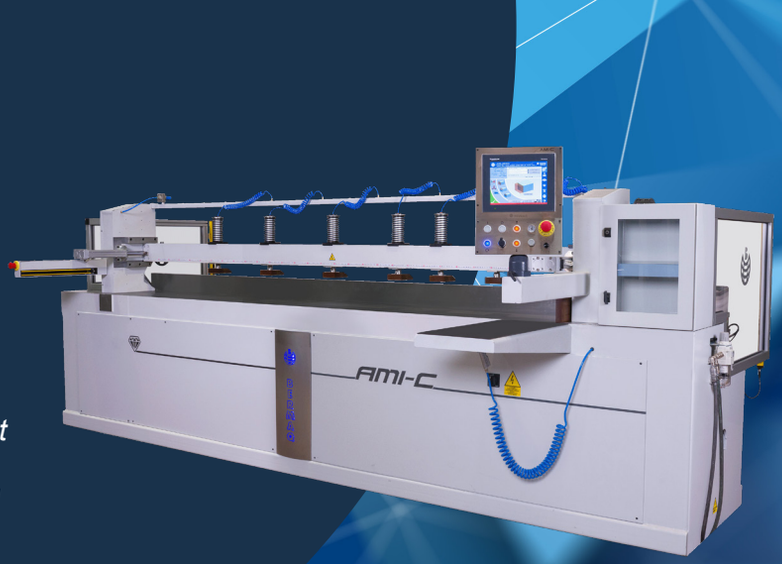

*The **AMi-C** is a fully equipped professional edge polishing machine. As standard, it features an automatic tilting head with automatic clamp positioning, an automatic tilting reference screen, and Teleservice for direct remote technical support. In addition, it offers a wide range of optional configurations, such as the additional buffing system, which further enhances surface finish quality and makes the AMi-C acrylic edge polisher the ideal solution for high-precision, high-productivity acrylic finishing applications.*



Automatic tilting head

The automatic head allows polishing at an angle. The control system automatically programs the passes needed to finish the workpiece.The clamps adjust automatically to securely hold the pieces.

- Automatic tilting head
- Automatic clamp positioning
- Optimized pass calculation
- Final pass finishing



Buffing System (patented)

This innovative system delivers an exceptional polished finish.
The polishing process can be easily activated or deactivated via the control panel.

- Automatic polishing system
- Automatic polishing paste application.
- Polishing at multiple angles.



Tilting reference screen

The tilt reference screen allows the user to perform miter polishing on multiple pieces simultaneously in a single pass. This option also enables angled polishing at different heights on the front plane.

- Automatic tilting reference screen (0-45º)
- Stacked miter edge polishing
- Inclined polished faces

(at different heights)



Parallelogram guide

The parallelogram guide allows the user to polish fully parallel faces on a single workpiece or on multiple pieces simultaneously.

- Precision parallelogram guide

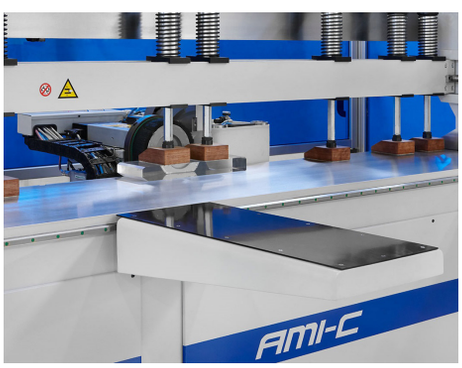

Additional mobile table

The additional table is movable via linear guides. It allows the user to support large acrylic sheets for polishing, making the work more comfortable and efficient.

- Movable supporting table

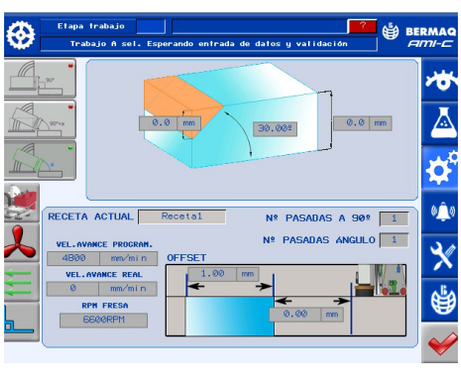

Teleservice

It includes an industrial router that enables remote maintenance and trouble shooting, helping reduce costs. The connection is made via a secure VPN tunnel, ensuring the privacy of the customer's network.

- Outdoor Ethernet Connectivity
- Industrial VPN Router Ewon Cosy o ARM @75Mhz processor, 16 Mb SDRAM, 32 Mb Flash or Open VPN 2.0

EXTERNAL DIMENSIONS
2100 (LxWxH): 3300X1980X1700 mm
3100 (LxWxH): 4300X1980X1700 mm

WORLDMAQ-3, SL CTRA/ MOLÍ DEL CASTELL S/N 08610 AVIÀ (BCN) TEL +34 93 823 10 60 bermaq@bermaq.com www.bermaq.com